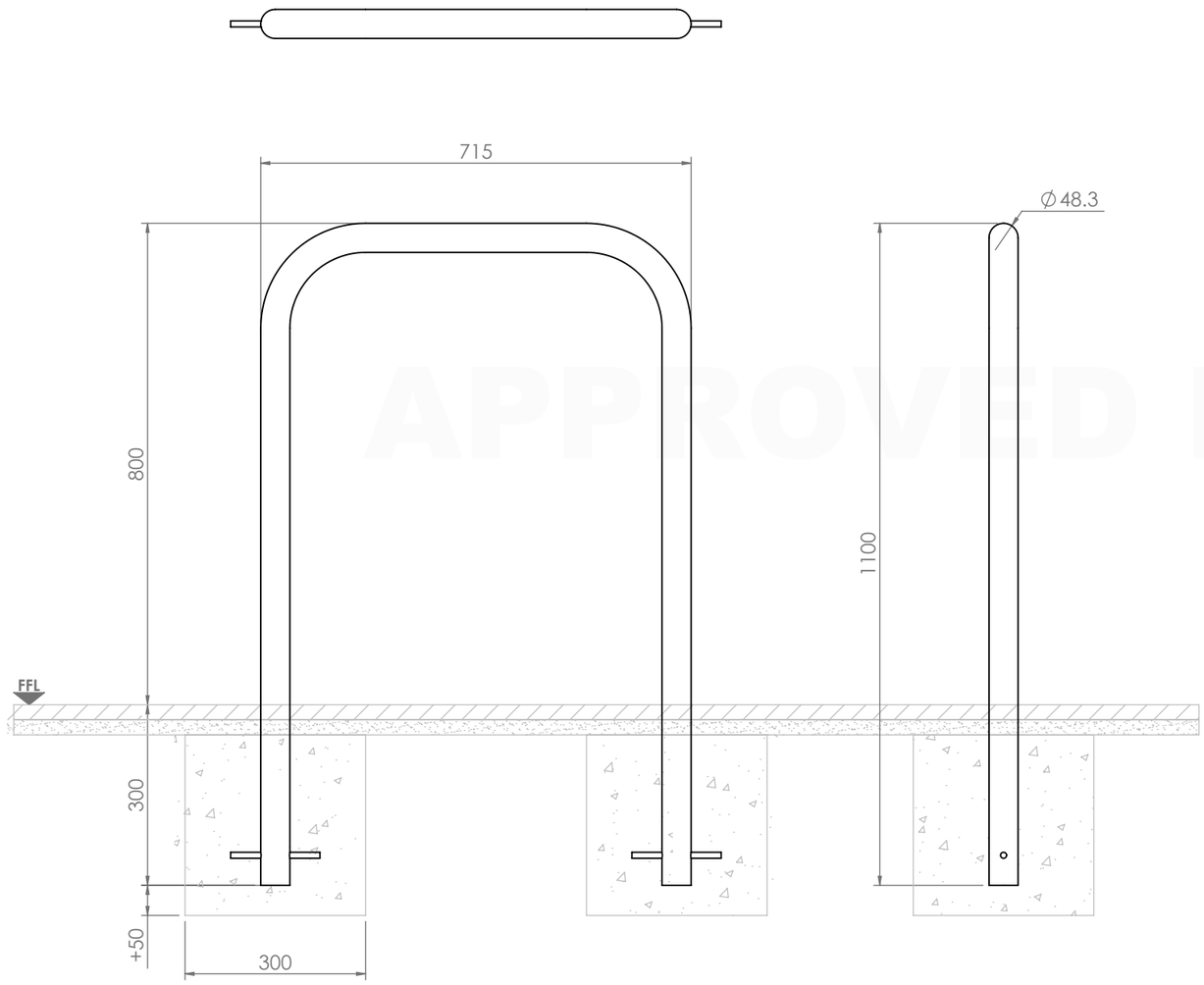

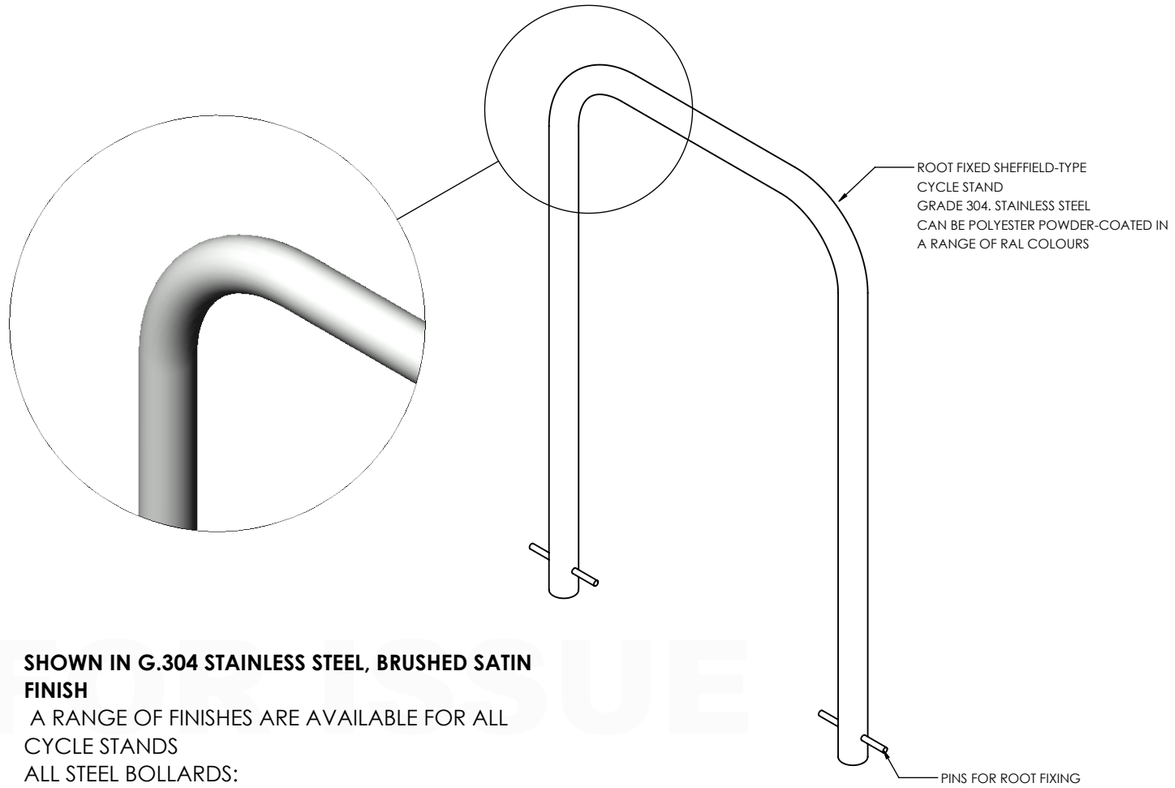

APPROVED FOR ISSUE

SHOWN IN G.304 STAINLESS STEEL, BRUSHED SATIN FINISH

A RANGE OF FINISHES ARE AVAILABLE FOR ALL CYCLE STANDS

ALL STEEL BOLLARDS:

- GALVANISED WITH SHARPS REMOVED
- POLYESTER POWDER COATED

(WIDE RANGE OF COLOURS AVAILABLE)

ALL STAINLESS STEEL BOLLARDS:

- BRUSHED SATIN
- BRIGHT POLISH
- BEAD BLASTED

FOOTING OPTION:

RECOMMENDED Min. FOUNDATION AS SHOWN IN C16/20 CONCRETE. **SITE ENGINEER TO DETERMINE APPROPRIATE SIZE AND COMPOSITION OF PAD BASED ON LOCAL GROUND CONDITIONS**.

APPROXIMATE TOTAL WEIGHT: **10.1 Kg**

SHEFFIELD CYCLE STAND
STAINLESS ROOT FIXED

GENERAL ARRANGEMENT

© All content copyright Street Furniture Direct Ltd